DWG. NO. 02370-942 SH 1 REV. C

INTERPRET DRAWING PER 10925-942

1.0 SCOPE

This specification defines the minimum performance characteristics for a MULTILAYER HIGH-EFFICIENCY ANTIREFLECTION COATING when deposited on both surfaces of a polished germanium substrate.

2.0 APPLICABLE REFERENCE DOCUMENTS

The following documents form a part of this specification to the extent specified herein:

Military Specifications:

Mil-C-48497A Coating of Glass Optical Elements

Mil-M-13508B Mirror Coating Process; Front Surface Aluminized, for Optical Elements.

3.0 DESIGN PARAMETERS

3.1 Spectral Characteristics

Transmission shall equal or exceed the following at ambient temperature and normal incidence.

7.5 to 11.5 microns	98% Average
7.5 to 11.5 microns	96% Minimum
11.5 to 12.3 microns	94% Average

Surface reflection shall be equal to or less than the following at ambient temperature and less than 25° incidence.

7.5 to 8.0 microns	0.9% Average
8.0 to 11.5 microns	0.3% Average
11.5 to 12.3 microns	1.3% Average

REVISIONS

ZONE	REV.	DESCRIPTION	DATE	APPROVED
	A	RELEASE FOR PROD PR-071- M.F	3-8-84	3/15/84
	A.1	REV PER ECO #773 DAF	5/3/84	5/3/84
	A.2	REVISE PER ECO # 818 MF	8-13-84	
	B	REV SHT 1+2 PER ECO # 1500	13JUL87	T Ryan
	C	REV PER ECO# 6234	02/25/98	

FILE COPY

QTY. REQD.	PART OR IDENTIFYING NO.	NOMENCLATURE OR DESCRIPTION	ITEM NO.

PARTS LIST

	LORIS
	GIMBAL
	IRIS
NEXT ASSY	USED ON
APPLICATION	

UNLESS OTHERWISE SPECIFIED DIMENSIONS ARE IN INCHES TOLERANCES ARE:
FRACTIONS ± DECIMALS .X'± .XX'± .XXX'± ANGLES ±

MATERIAL

FINISH

DO NOT SCALE DRAWING

DRAWN DATE
CHECKED
APVD

TITLE
SPECIFICATION,
8-12μ OPTICAL COATING

SIZE	TYPE	DWG. NO.	REV.
A		02370-942	C

SCALE SHEET 1 of 2

MAKEPEACE P-3854

INTERPRET DRAWING PER 10925-942

REVISIONS				
ZONE	REV	DESCRIPTION	DATE	APPROVED
	A	SEE SHT 1		
	A2	SEE SHT 1		
	B	REV PER ECO [illegible]	[illegible]	[illegible]

3.2 Environmental and Durability

The coating shall show no visible evidence of removal or deterioration after being subjected to the following tests, conducted sequentially in the order listed.

3.2.1 Humidity Exposure

The coating shall show no evidence of pitting or corrosion when exposed to 120° ± 4°F and 95% to 100% relative humidity for a period of 24 hours as specified in Mil-C-675A, Paragraph 4.6.9.

3.2.2 Hardness

There shall be no deterioration of the finished coating, such as streaks or hairline scratches, after rubbing the coated surface 50 strokes with a dry cheesecloth pad in accordance with Mil-M-13508B, Paragraph 4.4.5.

3.2.3 Adherence

No part of the coating shall be removed when tested with cellulose tape in accordance with Mil-M-13508B, Paragraph 4.4.6.

4.0 QUALITY ASSURANCE PROVISIONS

Compliance to Paragraph 3.0, DESIGN PARAMETERS, will be confirmed through acceptance tests performed on .040" nominal thick germanium witness pieces from each coating lot.

Note: When coating is applied to one surface only, compliance to Paragraph 3.1, Spectral Characteristics, will be confirmed for reflectance only, since transmission characteristics apply only if both surfaces are coated.

FILE COPY

SIZE	TYPE	DWG NO	REV.
A	09	02370-942	B
SCALE		SHEET 2 of 2	

NOTES:

1. MATERIAL: GERMANIUM, OPTICAL GRADE (EAGLE PICHER).
2. SURFACE QUALITY: 60-40
3. FRINGE TOLERANCE: 2 TO TEST PLATE
   1 IRREGULAR
4. TRANSMISSION:8-12μ
5. WEDGE: .001 TIR
6. REF: RADIUS SPECIFIED MATCHES ANGENIEUX TEST PLATE.
7. MARK EDGE OF LENS WITH ARROW AS SHOWN, INDICATING DIRECTION OF LIGHT PATH, USING "SHARPE" PEN OR EQUIVALENT.
8. BOX EACH LENS/WINDOW SEPARATELY, WRAPPED IN LENS PAPER AND CUSHIONED AGAINST DAMAGE. BOX MUST BE MARKED WITH INFRAMETRICS PART NUMBER AND REVISION.
9. CLEARLY MARK PART NUMBER ON EDGE (THICKNESS) OF LENS/WINDOW USING INDELIBLE EPOXY INK OR EQUIVALENT.
10. INSPECT PER MIL-O-13830A.
11. COATING TO COMPLY WITH INFRAMETRICS SPEC NO. 02370-942
12. COATING SHALL BE FREE OF RADIOACTIVE MATERIAL.

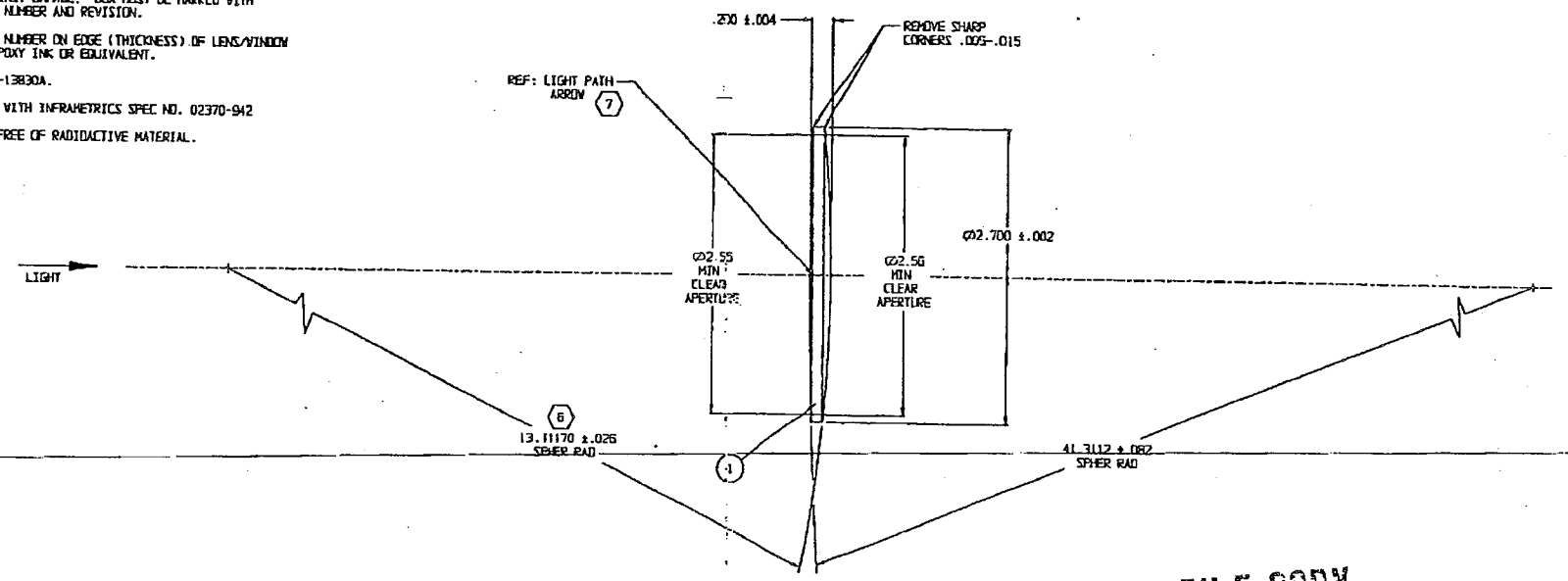

DRAWING NO.	SHEET	REV
10762-201	1	C

REVISIONS

ZONE	REV	DESCRIPTION	DATE	APPROVED
	A	REV PER ECO# M.5651	92/10/13	WESPISER
	B	REV PER ECO# 3998	95/10/05	MURPHY
	C	REV PER ECO# 4210	98/3/24	[illegible]

SEE SEPARATE PARTS LIST 10762-201

QTY REQ'D	CAGE NO.	PART NO.	DESCRIPTION	FIGN NO.
			PARTS LIST	

PROPRIETARY
"THIS DOCUMENT AND THE DATA DISCLOSED HEREIN OR HEREWITH IS NOT TO BE REPRODUCED, USED OR DISCLOSED IN WHOLE OR IN PART TO ANYONE WITHOUT THE PERMISSION OF INFRAMETRICS"

NEXT ASSY	USED ON
10792-201	LDR13

APPLICATION

MATERIAL: (1)

FINISH: SEE NOTES

DO NOT SCALE DRAWING

THIRD ANGLE PROJECTION

DRAWN: M.COHEN DATE: 04/04/89

CHKD

APPR

QUALITY

Inframetrics
16 Esquire Road North Billerica, Massachusetts 01862-2508

TITLE: LENSOBJECTIVE ELEM #1B 4X/15X TLSCP

SIZE: D CAGE NO. 56689 DRAWING NO. 10762-201 REV. C

SCALE: 2:1 SHEET 1 OF 1

NOTES:

1. MATERIAL: GERMANIUM, OPTICAL GRADE (EAGLE PICHER).
2. SURFACE QUALITY: 60-40
3. FRINGE TOLERANCE: 3 TO TEST PLATE
   .5 TO IRREGULAR
4. TRANSMISSION: 8-12μ
5. WEDGE: .004 TIR
6. REF: RADIUS SPECIFIED MATCHES ANGENIEUX TEST PLATE.
7. BOX EACH LENS/WINDOW SEPARATELY, WRAPPED IN LENS PAPER AND CUSHIONED AGAINST DAMAGE. BOX MUST BE MARKED WITH INFRAMETRICS PART NUMBER AND REVISION.
8. CLEARLY MARK PART NUMBER ON EDGE (THICKNESS) OF LENS/WINDOW USING INDELIBLE EPOXY INK OR EQUIVALENT.
9. INSPECT PER MIL-O-13830A.
10. COATING TO COMPLY WITH INFRAMETRICS SPEC NO 02370-942
11. COATING SHALL BE FREE OF RADIOACTIVE MATERIAL.

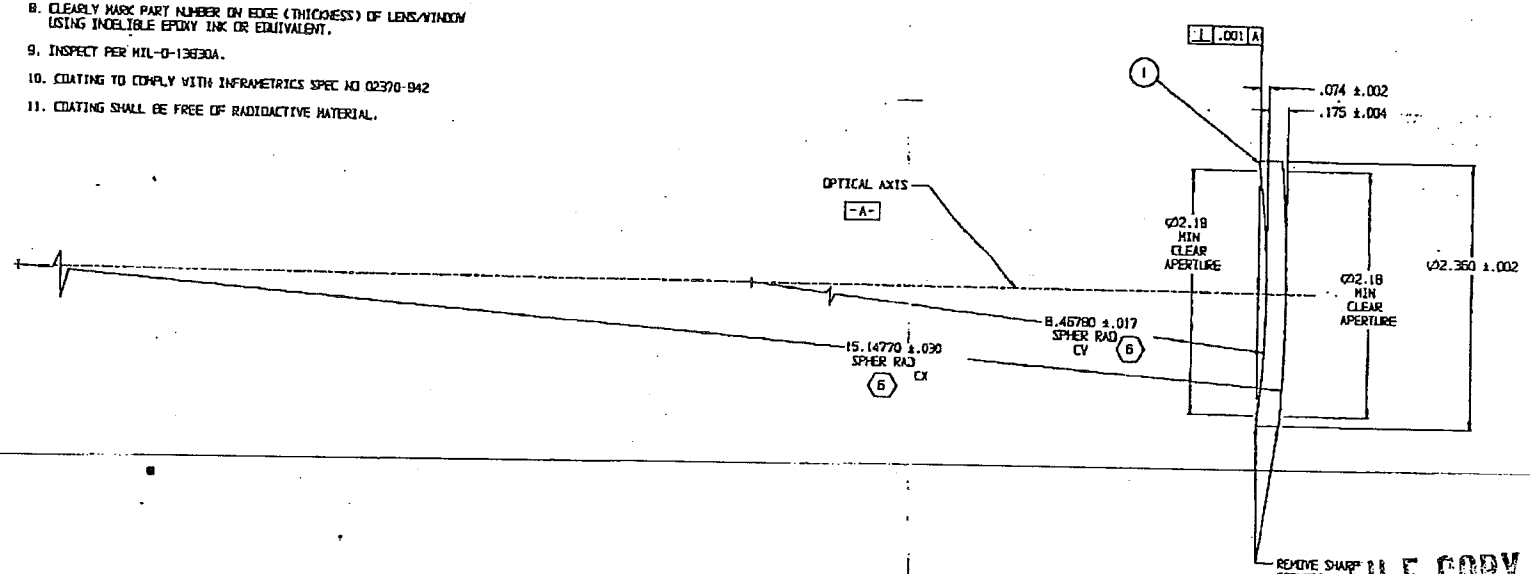

SEE SEPARATE PARTS LIST 10758-201

DRAWING NO.	SHEET	REV
10758-201	1	0

REVISIONS

ZONE	REV	DESCRIPTION	DATE	APPROVED
	A	REV PER ECO# M.5551	92/10/13	VESPISER
	B	REV PER ECO# 3808	95/10/06	MURTHY
	C	REV PER ECO# 4210	95/3/29	[illegible]
	D	REV PER ECO# 4226	95/6/2	[illegible]

PROPRIETARY
"THIS DOCUMENT AND THE DATA DISCLOSED HEREIN OR HEREWITH IS NOT TO BE REPRODUCED, USED OR DISCLOSED IN WHOLE OR IN PART TO ANYONE WITHOUT THE PERMISSION OF INFRAMETRICS"

NEXT ASSY	USED ON
10792-201	LORIS

APPLICATION

MATERIAL: 1

FINISH: SEE NOTES

CAGE NO.	PART NO.	DESCRIPTION	ITEM NO.

PARTS LIST

DRAWN: MCGOVERN DATE: 91/10/08

CHECK

APP

QUALITY

DO NOT SCALE DRAWING

THIRD ANGLE PROJECTION

Inframetrics
16 Esquire Road North Billerica, Massachusetts 01862-2593

TITLE: LENS OBJECTIVE ELEM #2 4X/15X TELESCOPE

SIZE: D CAGE NO. 66889 DRAWING NO. 10758-201 REV. 0

SCALE: 2:1 SHEET 1 OF 1

FILE COPY

DRAWING NO.	SHEET	REV
10761-201	1	C

REVISIONS

ZONE	REV	DESCRIPTION	DATE	APPROVED
	A	REV PER ECO# ML5651	92/10/13	WESPISER
	B	REV PER ECO# 3988	95/10/06	MURPHY
	C	REV PER ECO# 4210	96/3/24	[illegible]

NOTES:

1. MATERIAL: GERMANIUM, OPTICAL GRADE (EAGLE PICHER).
2. SURFACE QUALITY: 60-40
3. FRINGE TOLERANCE: 2 TO TEST PLATE
   1 IRREGULAR
4. TRANSMISSION: 8-12μ
5. WEDGE: .002 TIR
6. REF: RADIUS SPECIFIED MATCHES ANGENIEUX TEST PLATE.
7. BOX EACH LENS/WINDOW SEPARATELY, WRAPPED IN LENS PAPER AND CUSHIONED AGAINST DAMAGE. BOX MUST BE MARKED WITH INFRAMETRICS PART NUMBER AND REVISION.
8. CLEARLY MARK PART NUMBER ON EDGE (THICKNESS) OF LENS/WINDOW USING INDELIBLE EPOXY INK OR EQUIVALENT.
9. INSPECT PER MIL-O-13830A.
10. COATING TO COMPLY WITH INFRAMETRICS SPEC NO. 02370-942
11. COATING SHALL BE FREE OF RADIOACTIVE MATERIAL.

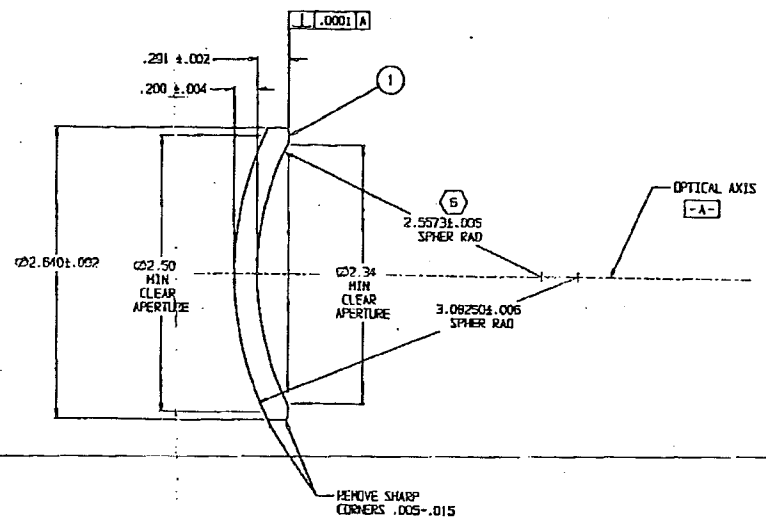

FILE COPY

SEE SEPARATE PARTS LIST 10761-201

QTY REQ'D	CAGE NO.	PART NO.	DESCRIPTION	ITEM NO.
			PARTS LIST	

PROPRIETARY
"THIS DOCUMENT AND THE DATA DISCLOSED HEREIN OR HEREWITH IS NOT TO BE REPRODUCED, USED OR DISCLOSED IN WHOLE OR IN PART TO ANYONE WITHOUT THE PERMISSION OF INFRAMETRICS"

NEXT ASSY	USED ON
10793-201	LIST1

APPLICATION

MATERIAL: 1

FINISH: SEE NOTES

DO NOT SCALE DRAWING

THIRD ANGLE PROJECTION

DRAWN: [illegible] 04-04-03

CHECK

QA

MFG

QUALITY

Inframetrics
16 Esquire Road North Billerica, Massachusetts 01862-2599

TITLE: LENS OBJECTIVE ELEM #1A 4X/15X TLSCP

SIZE: D CAGE NO. 58889 DRAWING NO. 10761-201 REV. C

SCALE: 2:1 SHEET 1 OF 1

DRAWING NO.	SHEET	REV
10757-201	1	C

REVISIONS

ZONE	REV	DESCRIPTION	DATE	APPROVED
	A	REV PER ECO# ML5651	92/10/13	VESPISER
	B	REV PER ECO# 3988	95/10/06	MURPHY
	C	REV PER ECO# 4210	96/3/24	[illegible]

NOTES:

1. MATERIAL: GERMANIUM, OPTICAL GRADE (EAGLE PICHER).
2. SURFACE QUALITY: 60-40
3. FRINGE TOLERANCE: SURFACE 1- 2 TO TEST PLATE
   SURFACE 2- 4 TO TEST PLATE
   .4 IRREGULAR
4. WEDGE: .004 TIR
5. TRANSMISSION: 8-12μ
6. REF: RADIUS SPECIFIED MATCHES ANGENIEUX TEST PLATE.
7. BOX EACH LENS/WINDOW SEPARATELY, WRAPPED IN LENS PAPER AND CUSHIONED AGAINST DAMAGE. BOX MUST BE MARKED WITH INFRAMETRICS PART NUMBER AND REVISION.
8. CLEARLY MARK PART NUMBER ON EDGE (THICKNESS) OF LENS/WINDOW USING INDELIBLE EPOXY INK OR EQUIVALENT.
9. INSPECT PER MIL-O-13830A.
10. COATING TO COMPLY WITH INFRAMETRICS SPEC. NO. 02370-942
11. COATING SHALL BE FREE OF RADIOACTIVE MATERIAL.

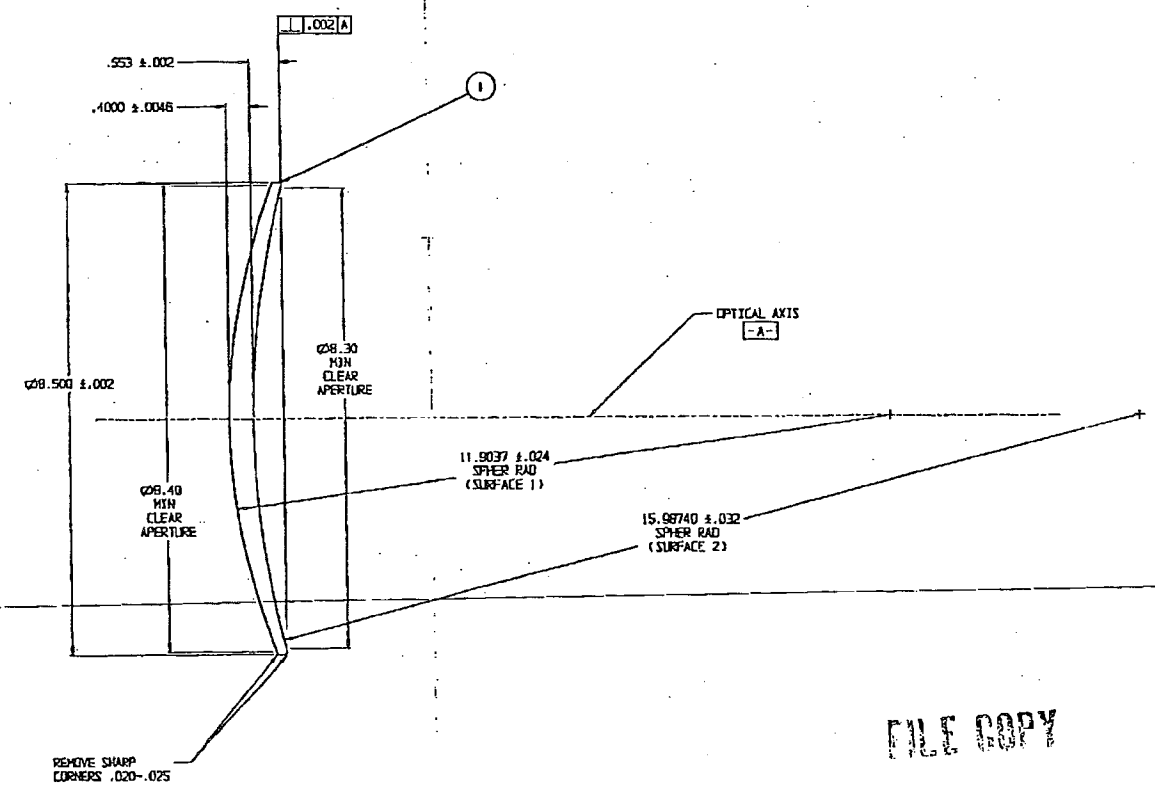

FILE COPY

SEE SEPARATE PARTS LIST 10757-201

DIT REQ'D	CAGE NO.	PART NO.	DESCRIPTION	TECH NO.
			PARTS LIST	

PROPRIETARY
"THIS DOCUMENT AND THE DATA DISCLOSED HEREIN OR HEREWITH IS NOT TO BE REPRODUCED, USED OR DISCLOSED IN WHOLE OR IN PART TO ANYONE WITHOUT THE PERMISSION OF INFRAMETRICS"

NEXT ASSY	USED ON
10790-201	LORIS

APPLICATION

ORIGINAL: 1

FINISH: SEE NOTES

UNLESS OTHERWISE SPECIFIED
TOLERANCES
DIMENSIONS ARE IN INCHES
DO NOT SCALE DRAWING
RADIO ANGLE
PROJECTION

NAME: RICHARDS DATE: 04/4/8
CHECK
DATE
MFG
QUALITY

Inframetrics
10 Dupont Park Drive Billerica, Massachusetts 01862-2588

TITLE
LENS OBJECTIVE ELEM #1
4X/15X TLSCP

SIZE D | CAGE NO. 56888 | DRAWING NO. 10757-201 | REV. C

SCALE: 1:1 | SHEET 1 OF 1